REV.	DATE	PART No.	DESCRIPTION
1	xx-xx-xxxx	xxxxxxxxxxx	xxxxxxxxxxx
2			
3			

TOLERANCE	A	B	C
0~30	±0.10	±0.25	±0.60
31~120	±0.15	±0.45	±1.10
121~315	±0.20	±0.60	±1.60
>315	±0.30	±1.10	±2.80

POSIFLEX

THIRD ANGLE PROJECTION

PART No.:

ENG.: Teatsai

CHK.: xxxxx

APPD.: xxxxx

MATERIAL: 17-AUG-10

PART NAME: KS-6815

Q'TY: 1

SIZE: A0

SCALE: 1:1

UNIT: MM

xx-xx-xxxx

xx-xx-xxxx

xx-xx-xxxx

FILE NAME:
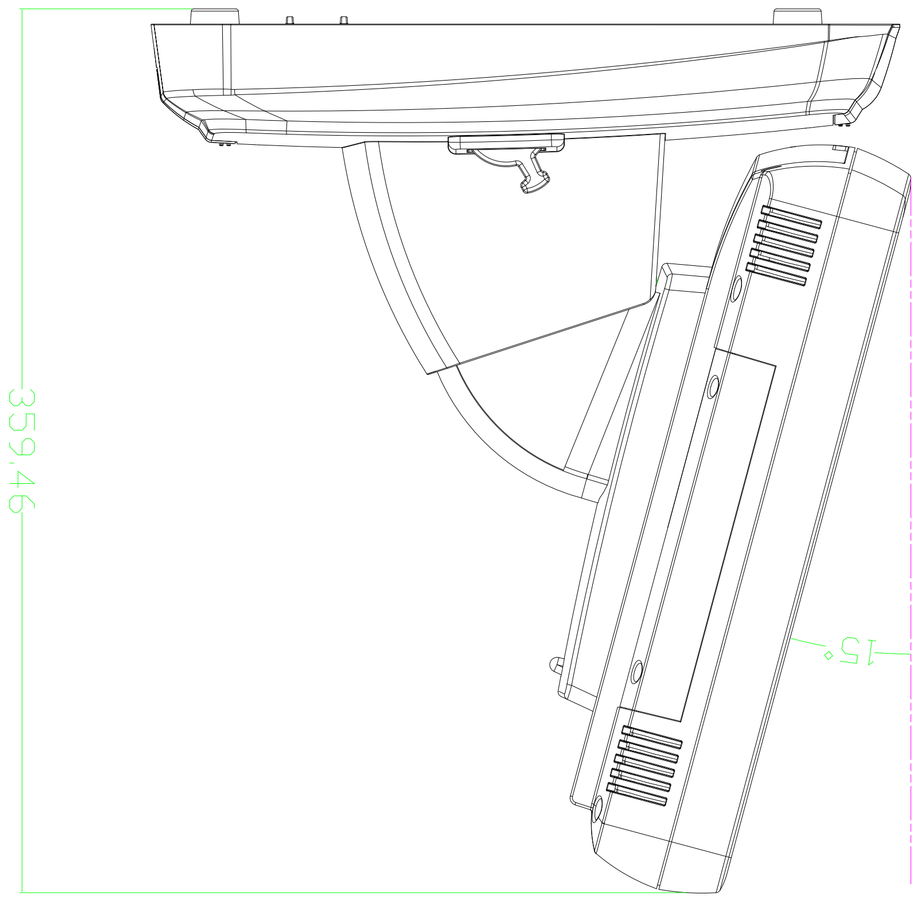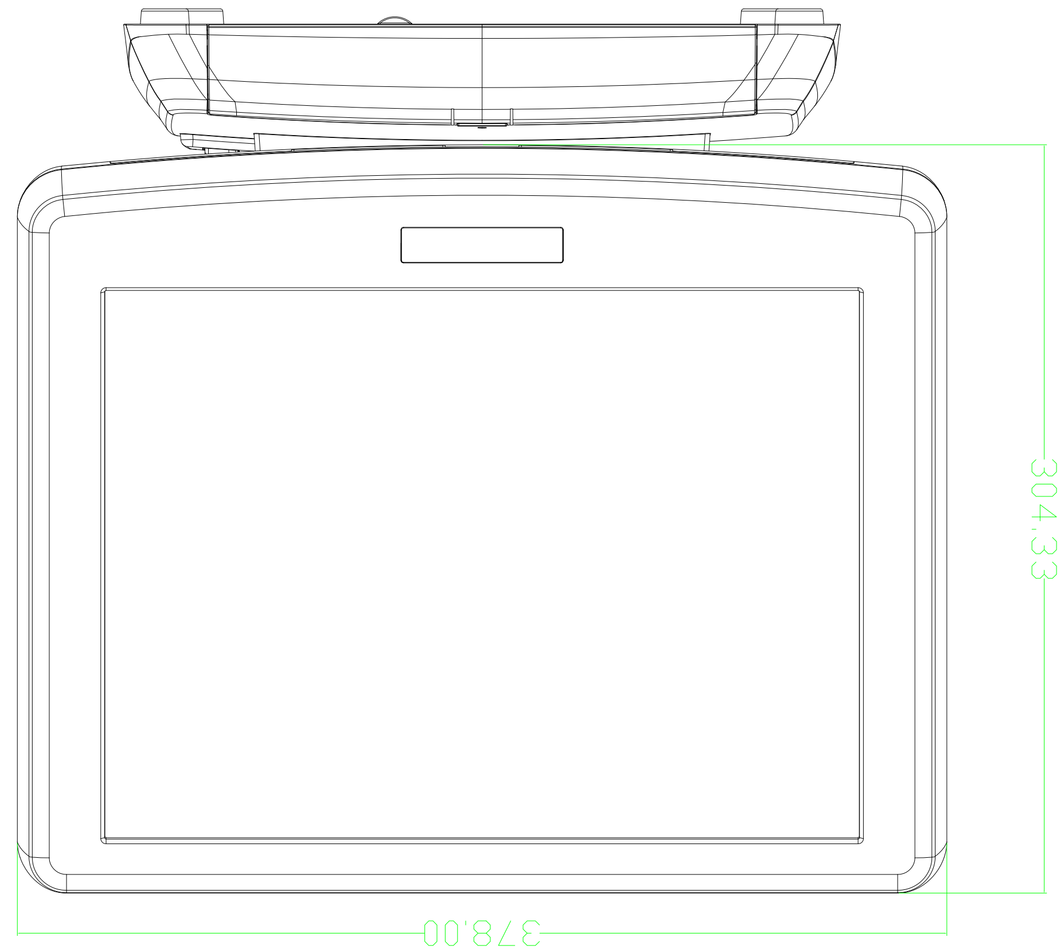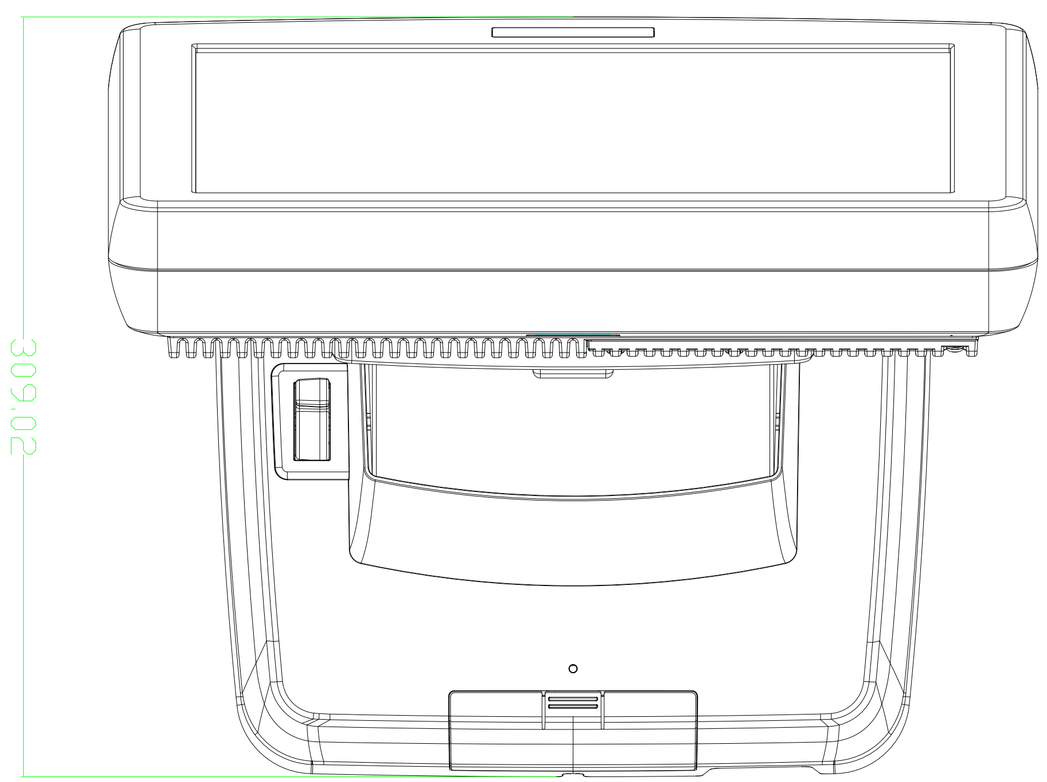
REV.: